Operation and Maintenance Manual

SEM Model 1400 and DS1400 Series

MAN-007 Rev 4. | Created 9-16-19 | ECN: 00434

For sales, service, parts, and customer support, contact us:
SECURITY ENGINEERED MACHINERY
5 Walkup Drive • Westborough, MA 01581
info@semshred.com
1-508-366-1488 • Toll Free US 1-800-225-9293
www.semshred.com

Contents

1. Disintegrator Safety Rules

1. **Learn and Obey Your Company's Safety Policy Regarding Disintegrating Equipment.**
2. **MOVING OR LIFTING THE DISINTEGRATOR**: Care must be taken when moving the machine along the floor or when lifting it. Damage may occur to sheet metal covers, electrical cabinets, or small brackets if pressure is applied to them when moving the disintegrator. When lifting the disintegrator, be certain of total machine weight and the capability of the lifting equipment.
3. **Always disconnect and perform lockout tagout (LOTO) when disconnecting the main electrical power to the disintegrator before performing any service.**
4. **SAFETY INTERLOCKS MUST NOT BE BYPASSED**. The mechanical and electrical safety interlocks ensure the safety of personnel. They should never be tampered with or removed for ANY reason. They should be frequently checked by a qualified mechanic for proper operation.
5. **DISINTEGRATOR LOCATION**: Provide an adequate area for routine maintenance that allows machine to be opened for service.
6. **SAFE HOUSEKEEPING:** The work area should be kept clean and uncluttered to allow personnel safe movement around the disintegrator during periods of operation or maintenance. No hand or power tools should be left on or about the machine. Any tools or other metal objects which mistakenly fall into the hopper feed opening can cause severe damage to internal screen chamber and cutting chamber components.
7. **SAFETY GLASSES OR A FACE SHIELD MUST ALWAYS BE WORN** when operating or servicing the machine. Although our machines are designed for the maximum in fly back control, caution must be used when operating near the area of the hopper feed opening in order to guard against unexpected material fly back.
8. **EAR PROTECTION** may be required when operating the machine during granulation of very hard/noisy materials. The Occupational Safety and Health Act of 1970 has established guidelines for Permissible Noise Exposures (OSHA 1910.95) that should be followed. Each site should determine their own requirements for PPE.
9. **NEVER** attempt to operate the disintegrator unless it is fully assembled with all guards and interlocks in place and functional.
10. Observe all danger, warning, caution and safety labels on the equipment.
11. Upon completion of any machine maintenance, be certain all safety guards and covers are securely and properly fastened prior to resuming machine operation. Failure to secure and tighten all safety guards and covers may result in injury to personnel and equipment.
12. **NEVER** wear any loose fitting clothes, neckties, or dangling items such as earrings, belts, or shoestrings. Jewelry such as wristwatches, bracelets, or rings should **NEVER** be worn. Long hair must be tied back or placed within a tight fitting hairnet. **NEVER** lean against or rest hands/feet on the disintegrator when it is in operation or opened for maintenance. **NEVER** stand on the disintegrator when it is in operation.
13. **ROTATION OF MOTORS:** All rotating items in the disintegrator are clearly marked on the machine. Always check for proper rotation of motors.
14. **ELECTRICAL GROUNDING:** All electrical equipment on the disintegrator must be grounded in accordance to all local codes and Article 250 of the National Electric Code.
15. **NEVER** modify the machine configuration or any individual component.

SEM has long recognized the importance of safety and has designed and manufactured our equipment with operator safety as a prime consideration. We expect users will abide by the foregoing recommendations in order to maintain operator safety.

2. Introduction & Installation

2.1 About Your Disintegrator

The SEM Model 1400 series is comprised of two basic units; (1) a mechanical cutting machine and (2) a waste evacuation/air system.

The security disintegrator machine destroys paper by dry slicing and cutting process that produces waste particles to user specified size. The waste evacuation system pulls the waste particles through a security screen, after which they travel in an air stream inside a rigid ductwork. The waste particles are then deposited into a customer supplied waste bag. The air system is supplied with a dust filter, which returns clean, filtered air back into the room. The air lock valve permits zero-pressure discharge at the waste container, allowing waste particles to fall by gravity.

A variety of screen sizes are available. The rates of document destruction and the size of waste particles are dependent upon the screen(s) size selected to meet your security requirements. Proper material feeding, together with preventative maintenance (such as maintaining sharp cutting knives with correct gap settings, proper drive belt tension, and clean air system filters) will provide years of trouble free operation. SEM supplies all the necessary electrical motor starters in NEMA 1 enclosures for wall mounting. The customer must provide the proper size circuit breakers or fused disconnect switches and electrical wiring to suit N.E.C., state, and local electrical codes.

DS Series: Any unit designated as a “DS” will come with a pre-shredder which will increase the overall height of the machine, as well as its throughput. All maintenance information included is relevant to a DS unit. Typically, they will have an additional control panel and require a stronger waste evacuation system.

2.2 Disintegrator Installation and Location

Select a level area, as the 1400 series disintegrator is assembled on a flat, 1" thick base plate. Position the machine with adequate clearance for operation and maintenance. A duct connection is supplied at the machine base for right hand evacuation. For a DS unit, the preshredder will already be mounted on top of the cutting chamber with a hopper in between. A system layout is typically created for each order, contact SEM Customer Care if another copy is needed.

2.3 Waste Removal System Installation and Location

The standard waste/air removal system consists of a fan cyclone and dust filter/exhaust unit. The fan cyclone requires mounting over a waste container provided by the customer as shown on the assembly prints. This type of system discharges the waste particles under pressure, requiring a sealed waste container. Back pressured air is exhausted through the dust filter, which is normally located in the disintegrator room.

Note: A rotary air-lock valve will be mounted under the fan cyclone unit.

The outlet of the fan cyclone cone **MUST** be centrally positioned above the waste container. If using a briquettor system, it will be to one side of the air-stand to allow room for the filter.

2.4 Dust Filter Assembly Location

Location of the filter is normally in the disintegrator room. Rigid duct must be run between the filter inlet and top of the fan cyclone unit. Proper size inlet is provided for filter duct connection. If used out-of-doors, weather-proof enclosures and a weather cap must be ordered.

Note: Filter assembly **MUST** be shaken daily and should be shaken before and after each run regardless of duration. A manual rope shaker is provided. An optional electric motor shaker is available at time of purchase, which is tied directly to the MCP.

Caution: Do not shake the filter when the air system is turned on.

2.5 Waste Containers Set Up

It is important that the user provide a waste container of sufficient size to accept the disintegrated end product. A 55-gallon drum is not adequate. A large dumpster or briquettor must be used with the system for proper efficiency of the document destruction operation. The volume of waste particles is considerably greater than the original volume of materials to be destroyed. Screens that are 3/32" produce a particle volume five times larger than the original materials. Screens 3/8" produce a particle volume eight times larger than the original materials. Using a briquettor will reduce the size of this significantly.

SEM recommends that the waste containers be sized in accordance with anticipated usage requirements (never less than 6 cubic yards for a Model 1424 and 10 cubic yards for a Model 1454). With high volume requirements,

consideration should be given to the use of compactors or balers to reduce haul away costs. The waste container must be of the proper type to suit either a pressurized waste discharge (sealed type) or a standard type for use with the free-fall/gravity from a rotary air lock valve. SEM recommends using a briquettor system for a “green” approach to waste. See below.

2.6 Briquettor Installation

SEM recommends using the 1400 series shredder with a briquettor system to significantly reduce the end volume of shredded particles and to allow for recycling. Certain screen sizes must be used with certain materials such as currency. Typical briquettor setups include an air stand capable of holding the fan and filter systems over the briquettor to reduce the overall footprint of the system and for greater dust reduction, and a separate control panel tied into the main control panel. Rooms must have a clear ceiling height of at least 18’ feet for installation, although custom solutions are available for almost any room.

2.7 Rotary Airlock Valve(s)

This 3-phase motor driven valve is provided for easier handling of waste collection. It is mounted under the fan cyclone unit, or under filter units if using a briquettor system. The air lock meters out the wastes and permits it to fall freely via gravity, eliminating the need for a sealed container. SEM provides the necessary cone adapter, hardware, flex-hose, and a magnetic starter with the unit.

Caution: Check gearbox to assure that it has been shipped with oil. If not, fill gearbox half-full with Mobil Synthetic Lubricant No. SHC63A or equivalent.

Important: Replace the pipe plug with plastic breather plug before operating.

3. Electrical Installation

Warning: Shut off all main incoming power and use proper LOTO procedures for your site.

Connect each motor starter per wiring diagram and local electrical code. All electrical installation for the site should be done by a licensed electrician for your area. All motor starters are provided for wall mounting. Safety limit switches on the disintegrator are prewired to a junction box. All motors require 3-phase service other than the optional motor shaker for the filter.

After wiring, check rotation to conform with direction of arrow on belt guard. Be sure all power is disconnected before removing control box cover. Repeat the same for all air system motors. Correct rotation is necessary. A licensed electrician can correct any incorrect motor rotations.

50 Hz: Contact SEM customer care for electrical information for 50 Hz applications.

Current Draw - Amps				
Disintegrator – 3 Ph, 60 Hz, 1800 RPM	**208V**	**230V**	**460V**	**575V**
@ 40 HP	118	106	53	42
@ 50 HP	145	130	65	52
@ 60 HP	171	149	74.5	59.4
@ 75 HP	212	192	96	77
@ 100 HP	275	248	124	99
@ 150 HP	398	360	180	144
Fan Cyclone – 3 Ph, 60 Hz, 3600 RPM	**208V**	**230V**	**460V**	**575V**
FC-75 – 7-1/2 HP	25.0	22.0	11.0	9.0
FC-100 – 10 HP	32.0	28.0	14.0	11.0
FC-150 – 15 HP	41.9	36.4	18.2	14.5
Rotary Airlock Valve – 3 Ph, 60 Hz, 1800 RPM	**208v**	**230v**	**460v**	**575v**
RAV 8 AN – 1/2 HP	2.2	2.0	1.0	0.8
RAV 10 AN - 3/4 HP	3.2	2.8	1.4	1.1
RAV 12 AN – 1 HP	4.0	3.6	1.8	1.4
Booster Fan – 3 Ph, 60 Hz, 3600 RPM (Optional)	**208V**	**230V**	**460V**	**575V**
BF 20 – 2 HP	7.8	6.2	3.1	2.7
BF 50 – 5 HP	17.5	13.6	6.8	6.1
BF 100 – 10 HP	32.0	26.0	13.0	11.0
Preshredder – 3 Ph, 60 Hz (DS Units Only)	**208V**	**230V**	**460V**	**575V**
@ 10HP	32.0	28.0	14.0	11.0
@ 15HP	48.0	42.0	21.0	17.0
@ 20HP	62.0	54.0	27.0	22.0

Electrical Schematics: Contact SEM customer care for a copy of your site's specific electrical schematic. Each schematic is unique to the system.

4. Security Screen

The security screen is a sheet of metal with holes set to the desired final particle size, which prevents any pieces from going through the fan system and waste collection that hasn't yet been reduced to the required size. The screen chamber can easily be opened for changing screens, visual inspection and clearing a jam. (Model 1424 has one screen, Model 1436 has two, and the Model 1454 has three screens.)

4.1 Changing Screen in 1424

1. Shut off all power before proceeding and deenergize the unit using proper LOTO procedures.
2. As a standard safety procedure, a safety limit switch is de-energized when the screen cradle is being lowered. The screen cradle on Model 1424 is raised or lowered by turning a winch. Make sure the locking lever for the winch assembly is pushed into the lock position.
3. Remove the two screen cradle nuts under the front of the screen cradle.
4. Hold the winch handle, pull out the winch holding lever, and unwind, lowering screen cradle to open position. Do not drop. Lower cradle slowly.
5. Before closing the cradle, clean all material from between all mating surfaces.
6. Turn the winch handle to raise the screen cradle to its closed position. Push in the winch locking lever.
7. Check for tight fit. Pull on belts to turn rotor, listening carefully for any metal obstruction. If there is an obstruction, lower screen cradle and check that screen to see if it has been inserted properly.
8. Replace the screen cradle nuts and tighten securely.
9. Pull on belts for final check to assure knives rotate without any interference.

4.2 Changing Screen in 1436

1. Shut off all power before proceeding and deenergize the unit using proper LOTO procedures.
2. As a standard safety procedure, a safety limit switch is de-energized when the screen cradle is being lowered. The screen cradle on the Model 1436 is raised or lowered manually via a handle located on the screen cradle. Make sure the locking lever for the winch assembly is pushed into the lock position.
3. Remove the three screen cradle nuts under the front of the screen cradle.
4. Grasp the handle at the screen cradle and lower the screen cradle to the open position.
5. Before closing the cradle, clean all material from between all mating surfaces.
6. Grasp the handle on the Model 1436 at the screen cradle and raise it to its closed position. The gas springs, located at the lower rear of the machine, will help to raise the chamber. The screen cradles will remain in their closed positions.

7. Check for tight fit. Pull on belts to turn rotor, listening carefully for any metal obstruction. If there is an obstruction, lower screen cradle and check that screen to see if it has been inserted properly.
8. Replace the screen cradle nuts and tighten securely.
9. Pull on belts for final check to assure knives rotate without any interference.

4.3 Changing Screen in 1454

1. Shut off all power before proceeding and deenergize the unit using proper LOTO procedures.
2. As a standard safety procedure, a safety limit switch is de-energized when the screen cradle is being lowered. The screen cradle on Model 1424 is raised or lowered by turning a winch. Make sure the locking lever for the winch assembly is pushed into the lock position.
3. Remove the four screen cradle nuts under the front of the screen cradle.
4. Hold the winch handle, pull out the winch holding lever, and unwind, lowering screen cradle to open position. Do not drop. Lower cradle slowly.
5. Before closing the cradle, clean all material from between all mating surfaces.
6. Turn the winch handle to raise the screen cradle to its closed position. Push in the winch locking lever.
7. Check for tight fit. Pull on belts to turn rotor, listening carefully for any metal obstruction. If there is an obstruction, lower screen cradle and check that screen to see if it has been inserted properly.
8. Replace the screen cradle nuts and tighten securely.
9. Pull on belts for final check to assure knives rotate without any interference.

5. Start Up Tip Sheet

5.1 Before Operation:

1. Ensure proper size security screen(s) is in place.
2. Ensure the waste container is not full and is in its proper position.
3. Shake the dust filter bag with the fan motor off.

5.2 Normal Operation:

1. Ensure MCP is set to automatic.
2. Start preshredder.
3. Press automatic start on MCP.
4. Press conveyor start.
5. Feed recommended volume of material.
6. Never feed material that is wet, greasy, or contains metal.
7. Periodically check waste level and rake materials into lower area of the container to prevent blockage.
8. Run system five minutes after last feed lot, then press automatic stop.

5.3 To Operate in Manual Mode:

1. Start air lock and fan system motor(s).
2. Start the preshredder. Start the disintegrator.
3. Start conveyor.
4. See items 5-8 above.

5.4 Periodically Check:

1. Knives (sharpen or replace knives as required).
2. Belt tension (lower belt span should have 1/2" vertical play).
3. Filter bin and tubes to prevent clogging.
4. Ductwork for air tight connections.
5. Rotor bearings and motor bearings for lubrication.
6. Rotary air lock valve (if used). Gear box to be ½ full with gear oil and chain and bearings lubricated.
7. **DS Units:** Check oil level in the preshredder reducer (approx. halfway up sight glass).

6. Operation

Note: Prior to start-up, see practical destruction feed rate. Please read this section carefully. Most problems can be eliminated by a careful review of this section.

1. Start fan cyclone before disintegrator. If optional air lock valve is used, it must be started first.
2. Start disintegrator. **DS Units:** Start pre-shredder
3. Gradually increase the load, pausing between each feeding to allow the Disintegrator to have time to properly cut the material and evacuate it. You will acquire a feel of feeding rates judged by the sound of the cutting. Overloading can cause a jam.
4. When feeding bound materials, allow the disintegrator to cut somewhat before introducing more material. Overfeeding to cut somewhat before introducing more material. Loose and crumpled material may be fed at a faster rate.

Caution: Do not feed hard metal materials into hopper as this can damage the knives or cutting head and void warranty.

7. Troubleshooting

Warning: De-energize the unit using proper LOTO procedures for your site before maintaining, cleaning, lubricating, or otherwise removing guards from this device.

7.1 Eliminating Jams

Preshredder: Upon jamming, the preshredder will automatically reverse and attempt to re-shred the material five times, after which it will stop and shut down. A light will illuminate on the pre-shredder control panel. Reverse the unit so the jam is backed out, de-energize the unit using proper LOTO procedures, and manually clear the jam. Do not climb up the conveyor.

Disintegrator: Jamming the disintegrator is usually caused by excessive feeding which jams the knives, by the waste container being full causing a buildup of material or by stopping the disintegrator before the material in the cutting chamber is reduced in size or evacuated.

To eliminate the jams:

- Push stop button immediately
- Turn main power disconnect switch to "OFF" position.
- Lower the screen cradle.
- Clear any obstructing materials that caused the overload. If knives are jammed, pry with wooden implement (2x4).

DS Unit: De-energize the unit using proper LOTO procedures. Remove the bolts holding the mid hopper panel and clear whatever material can be cleared from that area.

Note: If the disintegrator will not start after a jam has been cleared:

1. Check all safety limit switches to assure the plunger is depressed.
2. Press the external overload reset button on the motor starter.
3. Check fuses or circuit breaker box for blown fuses, tripped breakers, or overloads.

If overfeeding or a full waste container are not the reasons for a jam:

1. Is there a defective or loose wiring connection?
2. Do belts require tightening?
3. Do the knives need to be sharpened?

4. If knives were just replaced, are the bed knives positioned correctly?
5. Is the dust filter assembly clogged?

7.2 Common Troubleshooting Questions

1. Preshredder will not start:
   a. Check that the emergency stop button is pulled out.
   b. Check that the power supply switch is on.
   c. Contact an electrician to check the electrical panel for blown fuses, tripped circuit breakers, or overload resets.
2. No particle output:
   a. Feedstock may be jammed inside the hopper, shut the machine down and check if feedstock is jammed within the hopper. Be sure to de-energize the machine using proper LOTO procedures.
   b. Check if security screens are jammed or plugged.
   c. Duct run to the fan may be clogged, or waste container may be full, clean as required.
3. Excessive power required – blown fuses:
   a. Machine is overloaded. Reduce amount of feedstock put into the machine per unit of time.
   b. Knives are dull. Sharpen or replace knives and re-install.
   c. Knife gap is too large. Adjust knives to proper gap specification.
4. Machine stalls:
   a. Machine is overloaded. Reduce amount of feedstock put into the machine per unit of time.
   b. Pieces of feedstock jammed in the rotor. Clear the jammed material then visually inspect the rotor to ensure it is not damaged and that the knife gaps are correct.
   c. Machine has loose or thrown belts. Inspect, and if acceptable for use, re-install and tighten per maintenance instructions.
5. Bearings are noisy or hot:
   a. Lack of lubrication. Lubricate per maintenance instructions.
   b. Machine is overloaded. Reduce amount of feedstock put into the machine per unit of time.
   c. Bearings have exceeded their rated life. Consult with SEM customer service for replacement instructions.
   d. Bearings are not properly installed or tightened. Consult with SEM customer service for installation instructions.

6. Belts slip or squeal:
    a. Belts are too loose and/or machine is jammed. Tighten per maintenance instructions.
    b. Machine is overloaded. Reduce amount of feedstock put into the machine per unit of time.
    c. Machine has thrown belts. Inspect, and if acceptable for use, re-install and tighten per maintenance instructions. If not, replace.
7. Motor will not start:
    a. Fuses are blown or circuit breaker popped. Check panel and replace fuses or reset breakers.
    b. Limit switch is open. Check limit switches at the machine doors and any hopper cleanout doors. Ensure switch properly actuates.
    c. Verify correct pushbuttons are being pressed, and that the main disconnect switch is ON.
    d. Check that all E-stops are pulled out.
8. Particles build up in transition or duct:
    a. Fan is too small. Replace with larger unit.
    b. Transition or tubing is clogged. Clean as required.
    c. Return air vents are covered or too small. Ensure they are open.
    d. Fan is not evacuating properly. Check for loose fan impeller on shaft, worn fan impeller, or improper rotation.
9. Feedstock hangs up in hopper or cutting chamber:
    a. Material being placed into the machine for processing is too large for the hopper, cutting chamber or rotor diameter. Reduce the initial size of the feedstock.
    b. Knives are dull. Replace knives are reinstall.
    c. Overloading of the machine. Reduce the feed rate to uniformly feed the machine over an extended time period.

8. Maintenance

Tool Kit: SEM carries a tool kit containing all of the tools necessary for maintaining this disintegrator. Contact SEM customer care for details.

8.1 Belt Adjustments

The motor is mounted on an adjustable slide assembly. Loosen the bolts holding the motor down, then use the adjusting bolt on the motor plate. The bolts can be tightened or loosened for removal. Proper belt tension is determined by extending thumb pressure on belt, causing a slight bow on slack side. This should not be more than 1/2". Belt cover must be removed to check tension. A v-belt adjustment gauge is recommended for proper belt tensioning. Contact SEM customer care for details.

8.2 Belt Removal

Remove the belt guard cover and adjust motor to slack position. Replace belts and re-tighten if required after first two days of operation. After that, check monthly.

8.3 Lubrication

Grease fittings are located on the grease manifolds on the front of the two bearing housings. Grease every PM. Drain lines have been provided on the bottom of the bearings. Some grease seepage will occur. Wipe excess grease.

Lubrication Schedule:

Unit	Location	Frequency	Type (see below)
Disintegrator	Rotor Bearings	Every six months	A
	Motor Bearings	Check yearly	B
Conveyor	Bearings	Grease yearly	A
Rotary Air Valve	Gear Box	Check fluid level yearly	E
	Chain	Clean & oil every 30 days	D
	Bearings	Every PM	A
Pre-shredder	Cutters	Weekly	Light machine oil

A – Multipurpose grade 2 high temp grease (Fiske Lubriplate 630-2)

B – Polyurea type grease (Shell Dolium R or equivalent)

D – S.A.E. 50 oil spray chain lubricant

E – Mobil SHC634 synthetic lubricant

8.4 Dust Filter

Dust from destruction accumulates in the filter. Filter should be shaken before and after every run. **Never** shake the filter when the fan is on, as this only drives the dust deeper into the fabric of the filter

8.5 *Open Cutting Chamber Doors*

Reminder: Disconnect the unit using proper LOTO procedures before beginning

Caution: Use care while working on or cleaning cutting chamber.

With front and back cutting chamber doors open, clean and inspect bed knives and rotor knives. When cutting chamber doors are open, safety limit switches for front and rear doors will de-energize the motor starter to prevent accidental starting.

Model 1424 & 1436

1. Remove limit switch actuator plate on right side of front door.
2. Loosen all cap screws on front and rear door clamps.
3. Pull chamber doors out and allow to slide, pivot and hang in open position.

Model 1454

1. Remove limit switch actuator plate on right side of front door
2. Remove center clamping plate on right side of front door
3. Remove all socket head cap screws on front doors and door clamps.
4. Right front door opens first, then left front door. Pull doors out, allowing them to slide, pivot down and hang in open position
5. Remove all hex head cap screws on rear exterior cover and lift cover away using handles provided.
6. Remove all hex head cap screws on inner panel and lift panel out using handles provided.

8.6 Changing and Setting Knives

Inspection of Knives:

Knives should be sharpened from two to six times a year depending on use. For instance, your knives may require sharpening after three months of initial operation. Your sharpening schedule should then be every three months. It is recommended that a spare set of knives be available for your disintegrator to eliminate down time.

Removing Knives:

1. Remove all rotor knives through the front opening in cutting chamber.
2. Re move front and back bed knife clamp bars.
3. Remove front and back bed knives through the respective cutting chamber openings, noting that the front bed knife tip points up and rear bed knife tip points down.
4. Loosen all bed knife adjusting screws, clamp bar adjusting screws.

Replacing Knives:

1. Replace back bed knife, cutting tip pointing down, and front bed knife, cutting tip pointing up.
2. Place respective bed knife clamp bars on bed knives.
3. Install all bed knife bolts and tighten only enough to keep bed knife and clamp bar snug.
4. Install each rotor knife in rotor seat with hex head rotor bolts. Be sure that the back edge of knife is parallel in rotor seat, then fully tighten to 190/200 foot-pounds of torque for 3/4" knives (for old style 1424 disintegrator only) or 380/390 foot-pounds for 1" thick knives.
5. Adjust each bed knife forward with adjusting screws until a .005-inch clearance is maintained between each rotor knife and the respective bed knife. To check the clearance, set a .005 inch feeler gauge in gap area and manually turn rotor in reverse direction from normal power rotation. Note that the gap should be set to the highest knife, and that you won't be able to get all the knives set at .005". This is to ensure (a) that if the bed knife is in too far, no damage will occur to the knife edges and (b) you will not cut off the feeler gauge. When set correctly, end to end, a bumping noise will occur as rotor knife passes the feeler gauge against bed knife.
6. With bed knife clamping bar adjusting loosened, move clamp bars in to 1/8" before bed knife cutting edge.
7. Tighten bed knife bolts to 170/180 foot-pounds of torque.
8. Without moving the setting of the bed knife, tighten lock nuts to frame. Spin the rotor without the feeler gauge to ensure that you have no knife on knife contact.
9. **NOTE:** The torques mentioned are standard screw manufacturing specifications for screw diameter and threads per inch. Rotor knife screws SAE grade #8, hex head, bed knife screws are 1960 series socket head.

Knife Sharpening:

After several weeks of document destruction, the abrasive wear on the knives during cutting dull the sharp edges and, therefore, increase the gap between knives. Since applications vary, periodic inspection will determine what time schedule will suit re-sharpening of the knives. In general, most users change knives 3-4 times per year. Very dull knives are evident when paper dust emits from the feed hopper door and/or when the disintegrator rotor easily jams on light material feeding. Knives may be sent to Security Engineered Machinery for sharpening or they may be sharpened by a capable machine shop in your area.

Note: When sharpening, the rotor knives must be sharpened as a set to maintain proper tolerances between the bed knives.

Minimum Knife Sharpening Specs:

After grinding a number of times, the knives must be checked to be sure that there will be adjustment left in the bed knives. The general rule is to place a rotor knife and bed knife back to back, as shown below, and measure the total distance dimension “B”.

Distance Dimension “B” Minimum = 6-13/16”–for 1” thick rotor knife, or 6-5/8” for 3/4” thick rotor knife (1424, 40-75HP Pre 6/1991)

Notes: If Dimension “B” is close to minimum, a new set of knives should be ordered from Security Engineered Machinery. Please contact Customer Service at 1(800) 225-9293.

Bed knives tolerance must be held alike and parallel in sets within .010”. Rotor knives tolerance must be held alike and parallel in sets within .002”.

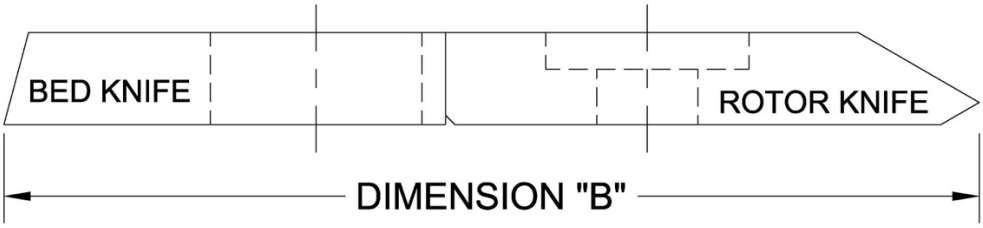

9. Cutting Chamber Diagram

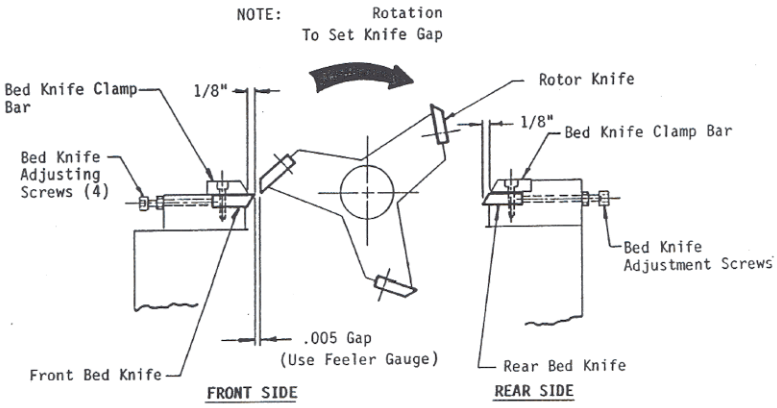

QUANTITY OF KNIVES			
MODEL MACHINE	ROTOR KNIVES		BED KNIVES
	STANDARD 3 BLADED	OPTIONAL 5 BLADED	
1424	3	5	2
1436	6	10	4
1454	9	15	6

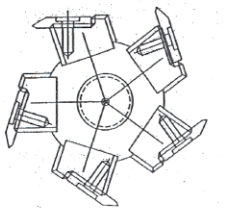

OPTIONAL 5-BLADED ROTOR

10. Disintegrator Detail

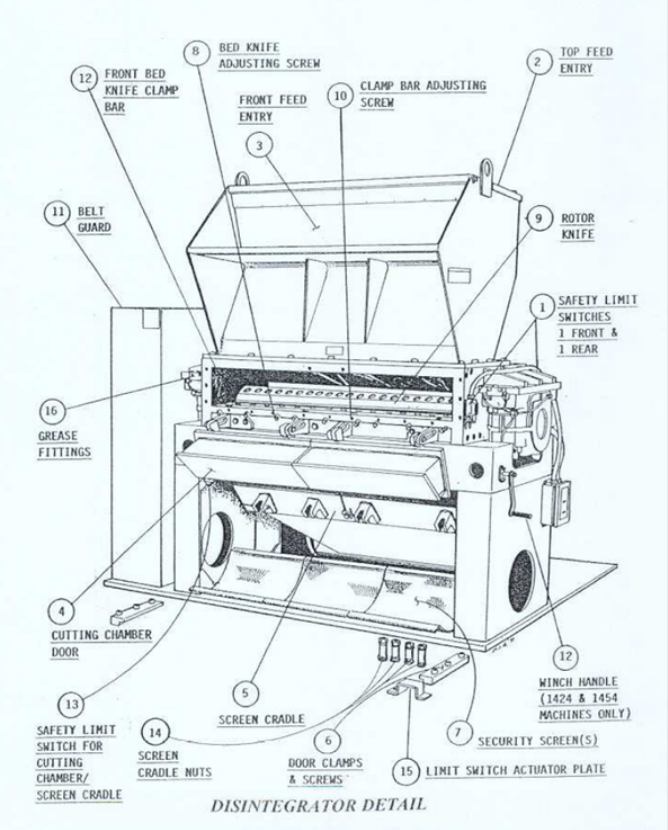

DISINTEGRATOR DETAIL

11. Disintegrator Dimensions –1436

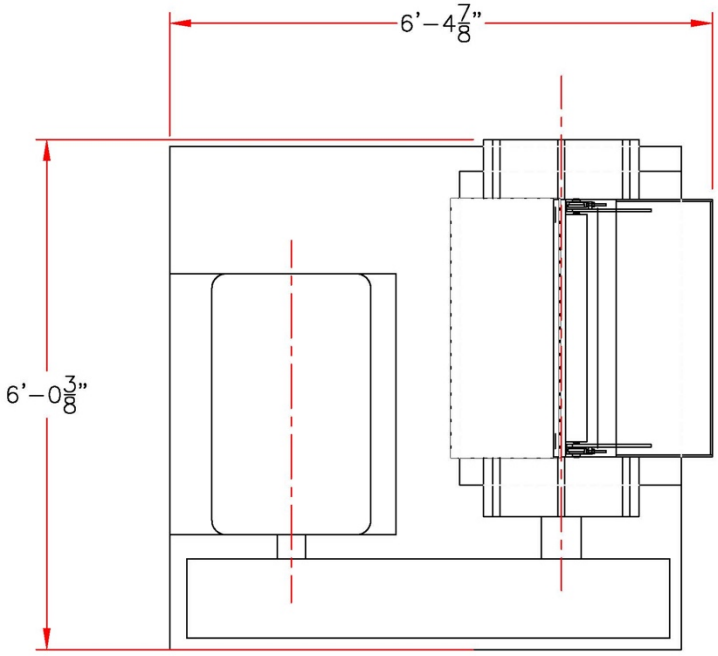

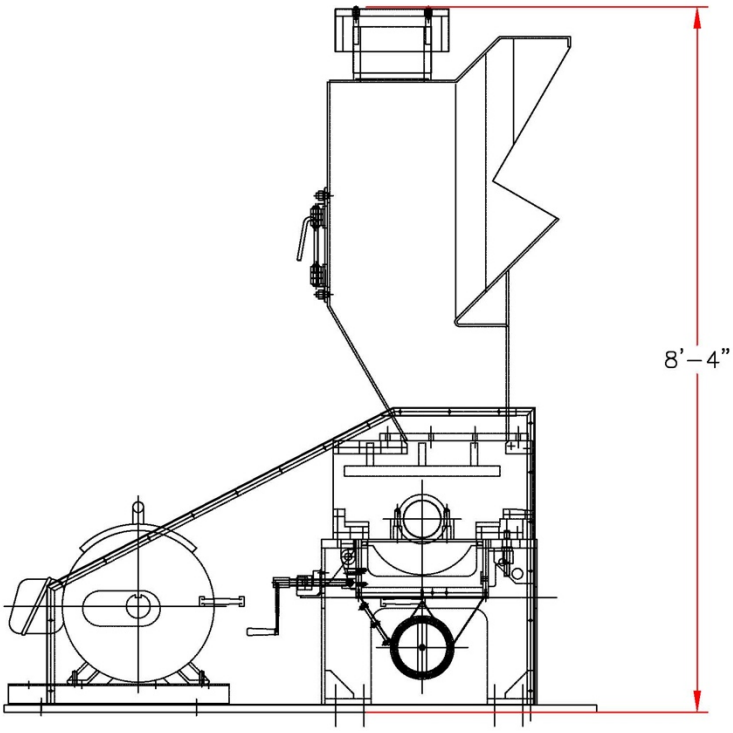

12. Disintegrator Dimensions – DS1436

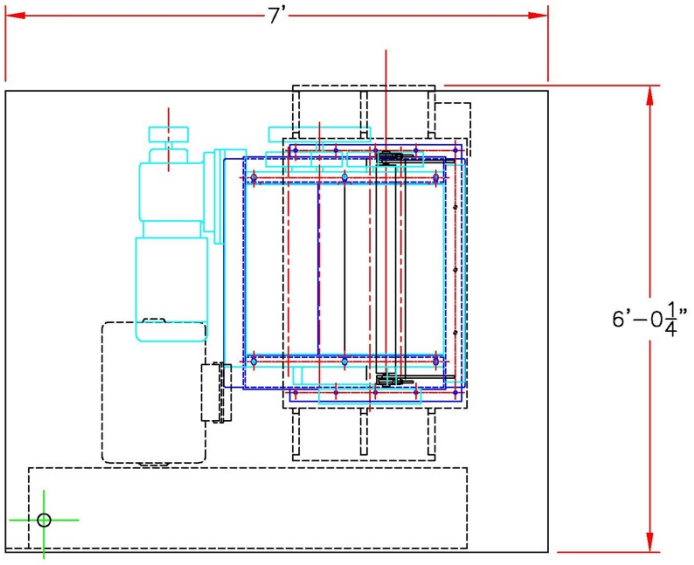

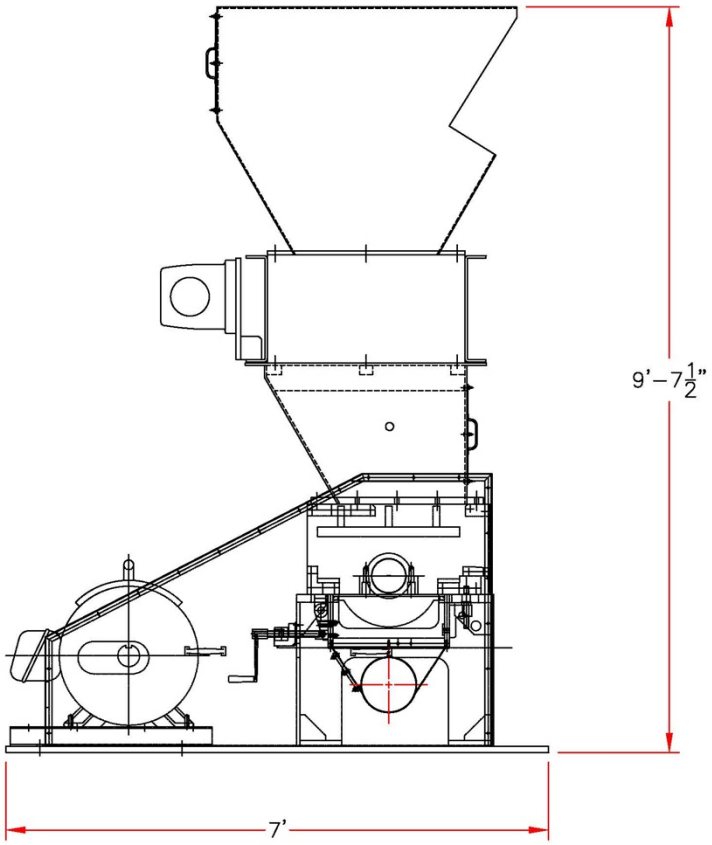

13. Disintegrator Dimensions – 1424

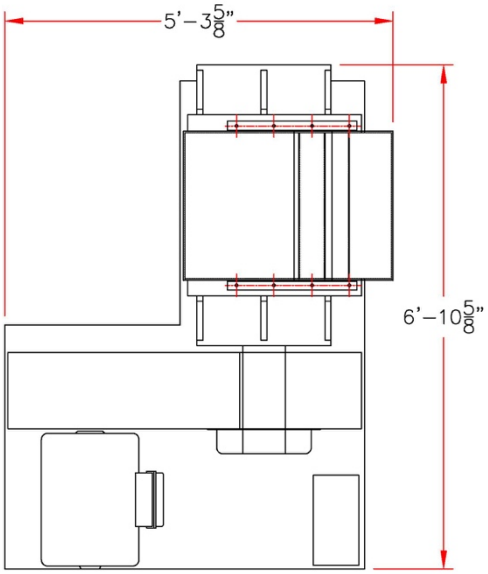

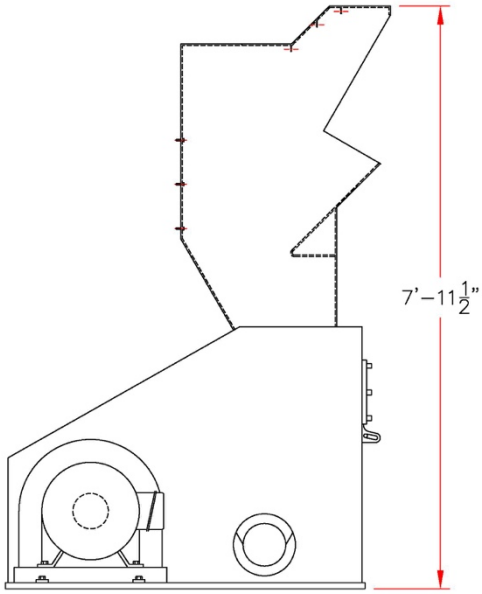

14. Typical Briquettor Setup

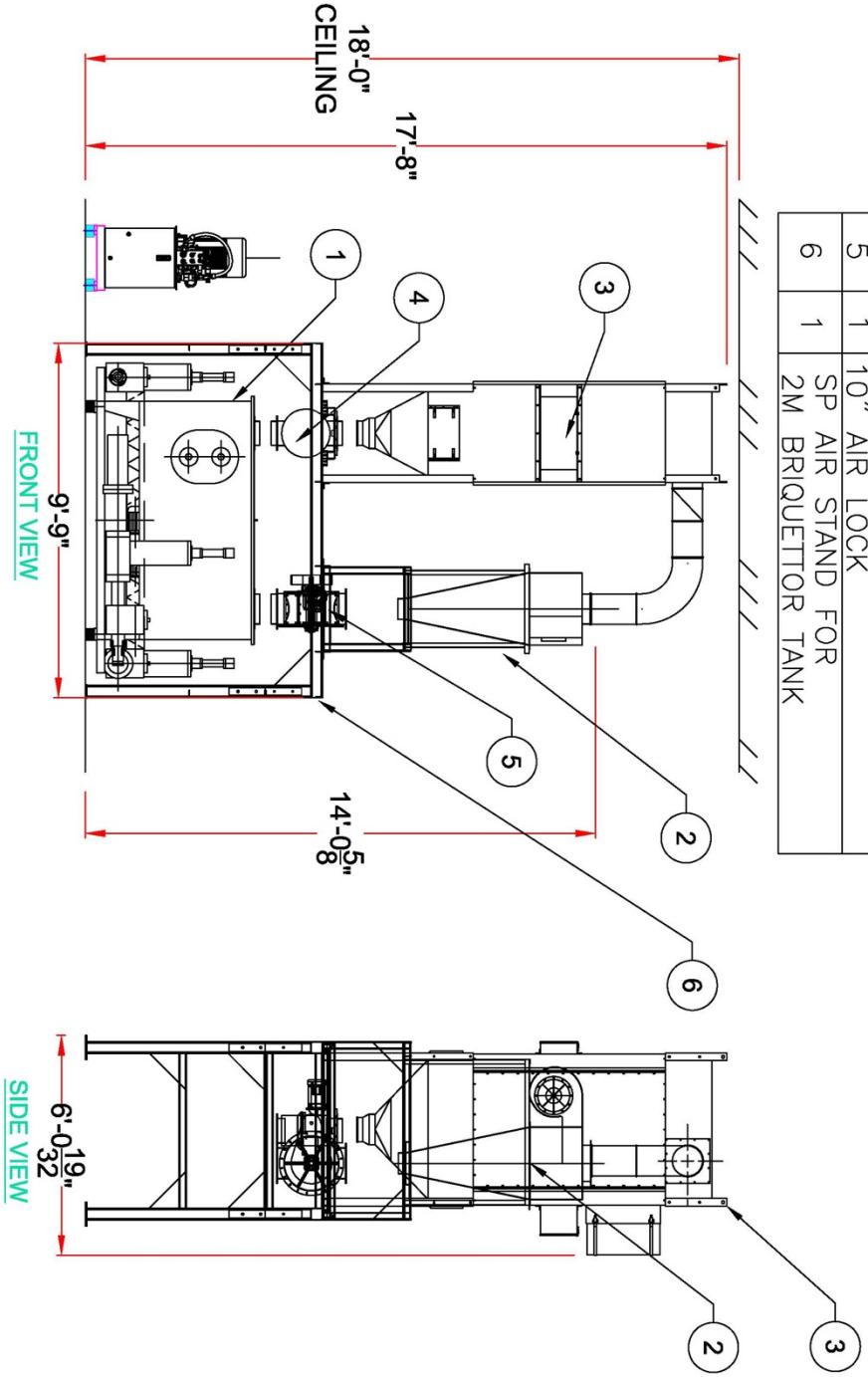

Global Leader in High Security Information End-of-Life Solutions for Over 50 Years

For service, parts, and customer support, contact us:

SECURITY ENGINEERED MACHINERY

5 Walkup Drive • Westborough, MA 01581

service@semshred.com

1-508-366-1488

www.semshred.com

Follow us on social media:

Facebook: https://www.facebook.com/semshred

Twitter: https://twitter.com/semsecure

Linkedin: https://www.linkedin.com/company/security-engineered-machinery

Youtube: https://www.youtube.com/user/datadestruction