Security Engineered Machinery Co., Inc

OPERATIONAL & MAINTENANCE MANUAL

SEM Model 2 SSD-VK

Dual Stage System

POP-0036 Rev. 1
Revised: 06/18/2014
Serial Numbers Prior to 2404032-A

Security Engineered Machinery Co., Inc.

NATIONWIDE SERVICE

Phone Toll Free: 1(800)225-9293

Email: Service@SEMSHRED.com

Fax: 1(508)366-1671

Website: WWW.SEMSHRED.COM

Table of Contents

Index	2
Important Safety Processes	3
General Assembly Drawings	4-5
Unpacking Instructions	6
Power Supply/Installation Requirements	7
Startup and Operation	8-9
Materials Tested	10-11
Maintenance	12-14
Maintenance Diagrams	15-17
Knife & Rotor Settings	18
Stage 1 Chamber Assembly	19
Stage 2 Chamber Assembly	20
Electrical Diagram	21
Recommended Spare Parts	22

IMPORTANT SAFETY PROCEDURES

Your new SEM Model 2 SSD-VK incorporates powerful, heavy duty cutting mechanisms. **Serious and permanent injury may result** if proper precautions are not followed.

1. This equipment should never be operated by children or individuals that are untrained or incapable of understanding these safety precautions!

2. Do not reach into the feed opening for any reason! Never insert fingers, hands, other extremities, or objects not meant to be crushed into the feed opening!

3. Do not operate or come into close proximity to this equipment wearing loose clothing, neckties, dangling jewelry, or long hair which may become entangled in the cutting chamber.

4. Maintenance or repair of this equipment should be performed only by trained, authorized service personnel.

5. Always disconnect electric power (unplug) before removing or opening any cover or other panels providing access to the internal mechanisms.

Important:

If you over feed the Shredder or have an Emergency and need to shut down the machine, press the red Emergency Stop button on the left side of the machine or open the collection bin door.

Warning:

Wait at least 30 seconds after inserting the last drive before pressing the red STOP pushbutton to prevent STAGE 1 from jamming upon start-up.

Warning:

Wait for the Input chute to empty itself of all shredded material before feeding another drive.

General Assembly

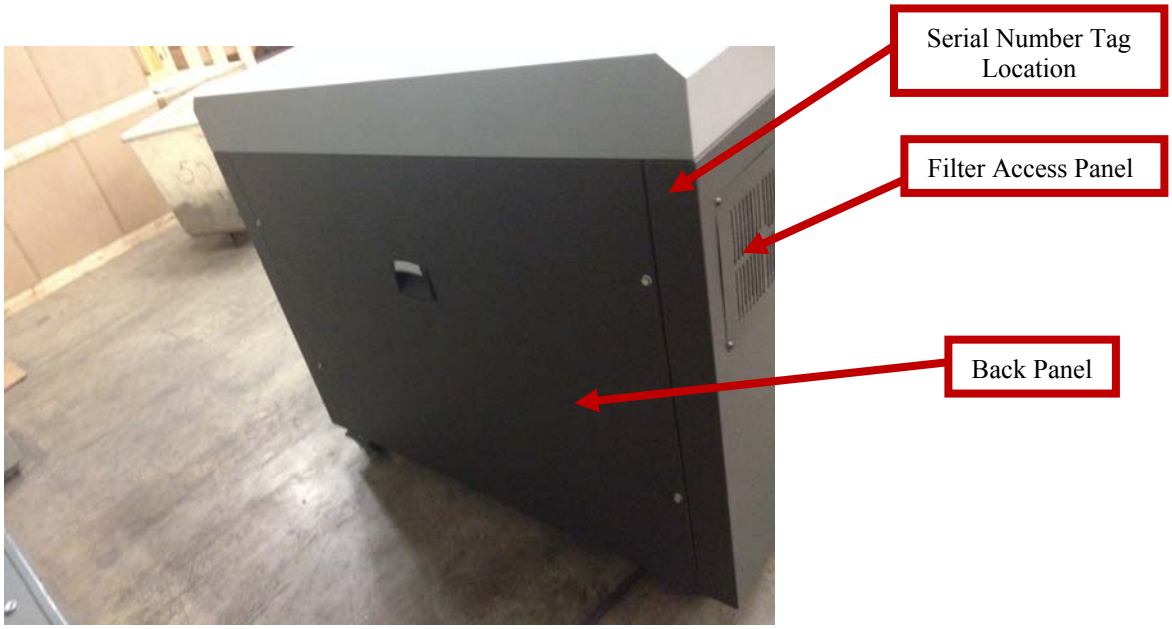

General Assembly Continued

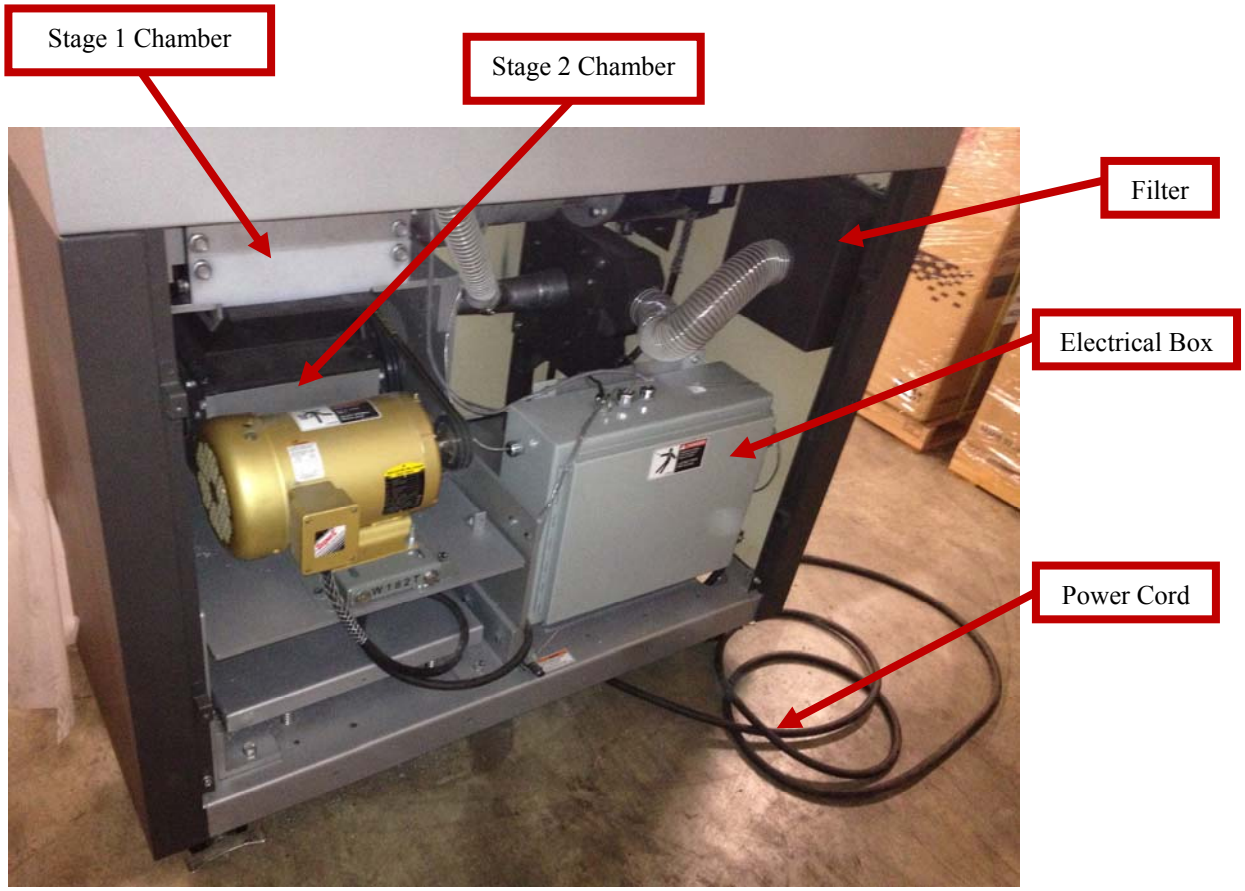

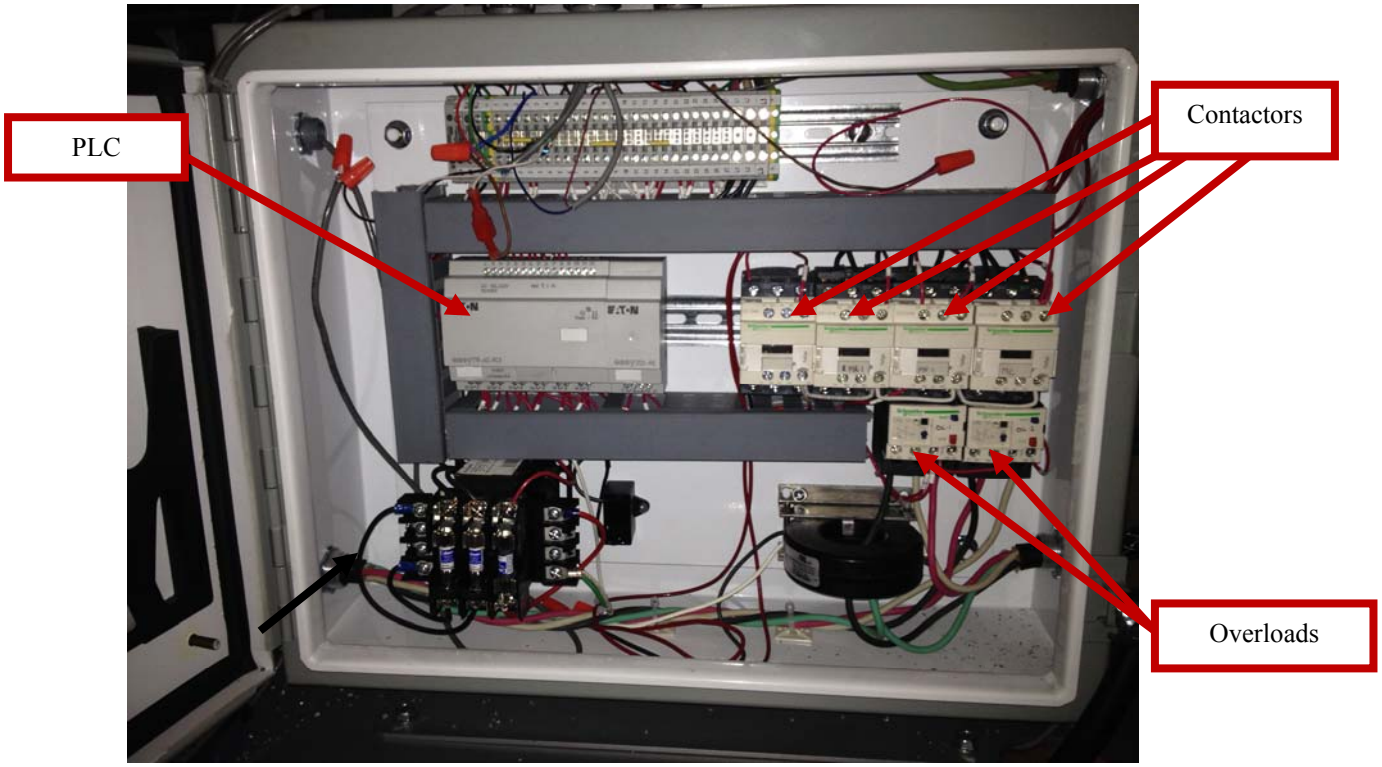

Unpacking Instructions

The **Model 2 SSD-VK** has been secured to a pallet for shipping. Please inspect equipment immediately of any shipping damage.

Important Note: Prior to unpacking, if there is any visible damage to the Model 2 SSD-VK or to the crate during shipping, the receiver must note what is damaged on the Bill of Lading and contact the shipping party immediately.

Tools needed:

- Lift truck with a minimum lifting capacity of 1500
- Hammer
- Pry bar
- Strap Cutters

Unpacking:

1) Remove sides of crate
   Tools needed: Hammer and Pry Bar

2) Cut straps holding Model 2 SSD-VK
   Tools needed: Strap Cutters

3) Remove the Model 2 SSD-VK from the pallet.
   Tools needed: Lift Truck

   Note: It is recommended to lift the Model 2 SSD-VK from the front with the forks 30" apart. The majority of the weight will be on the right side of the Model 2 SSD-VK.

The Model 2 SSD-VK is equipped with casters for ease of handling after the unit is lifted off of the pallet.

Power Supply/Installation Requirements

MODEL 2 SSD-VK

For Connecting to Three Phase Power

VOLTAGE	FULL LOAD AMPS (FLA)	RECOMMENDED SERVICE
208 Volts	**~16.6 FLA**	**30 Amp**
230 Volts	**~15.8 FLA**	**20 Amp**
460 Volt s	**~7.9 FLA**	**15 Amp**

*When operating at 208 V, SEM recommends no more than a 3% voltage drop on the receptacle for optimal performance (Min 202 V).

Note: Model 2 SSD-VK should be connected to a dedicated circuit regardless of voltage.

CONNECTION INFORMATION

All Model 2 SSD-VK are supplied with an open-ended power cord. This can be directly hardwired to a Power Disconnect Switch.

It is recommended that a Licensed Electrician perform this operation.

UNIT LOCATION

The Model 2 SSD-VK can be located in an office or warehouse area within 6 feet of a wall receptacle. It is recommended that the machine be at least 3 to 4 inches away from the wall for proper ventilation.

After the open-ended power cord has been connected, the unit can be activated by a key-switch on the left side of the machine.

Note: Motors are normally dual voltages, 230/460 but can only be operated at the specific voltage as wired at the factory. If a voltage change is required in the field, contact the factory for proper instructions.

Startup and Operation

Please read this section carefully.

Most problems occur during the first hours of operation. These can be eliminated by careful review of the operating, maintenance and recommended service instructions.

Pre-start-up procedure:

- Familiarize yourself with all controls and button locations.
- Ensure that all guards and covers are in place.
- Ensure that the area is clean.
- Check input area for debris, discarded tools, etc.

Controls on Top of Unit

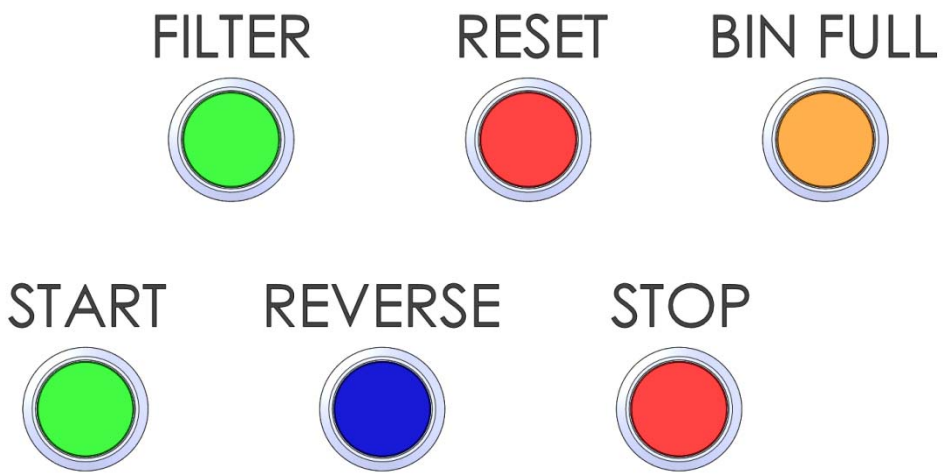

Startup Procedures:

1) Turn "key-switch" located on the left side of the cabinet to the ***ON*** position.
   Once the switch is in the ***ON*** position, the red ***STOP*** pushbutton will illuminate indicating power to the unit. The internal filter will automatically turn on, and the green ***FILTER*** light will illuminate.

2) Press the green ***START*** pushbutton to start the dual stage system. Once the pushbutton is pressed, the green ***START*** pushbutton will illuminate. The red ***STOP*** light will extinguish and green ***FILTER*** light will remain on.

Feeding and Operating Procedures:

3) Begin feeding Solid-State hard drives through the Feed Chute. Feed one Solid-State Drive through the feed chute every 45−60 seconds, depending on size of the items being destroyed. **Do not insert Rotational Media into this unit.**

   Caution: Feeding drives too quickly may cause a jam or damage the screen.

4) When the Collection Bin is full, the ***BIN FULL*** light and the ***STOP*** pushbutton will illuminate. STAGE 1 will stop and STAGE 2 will initiate timed shutdown. After timed shutdown has completed, open the Collection Bin Door and empty the contents of the Collection Bin. Re-insert the Bin before starting the unit again. When the ***BIN FULL*** light is illuminated the collection bin will weigh approximately 50 lbs.
Disclaimer: If destroying lighter material in volume the ***BIN FULL*** light may not illuminate when the bin is filled. SEM recommends that the operator gauge how much material is run to avoid overflow and potential damage to the unit.

If ***STAGE 1*** experiences a jam, the unit will automatically reverse up to five times to clear the jam. If jam is not "automatically' cleared, the unit will go into a timed shutdown mode illuminating both the red ***RESET*** pushbutton and the red ***STOP*** pushbutton. To restart the unit, press the ***RESET*** pushbutton. When the unit is ready to run, the red ***RESET*** button will extinguish. Next, press the green ***START*** pushbutton to restart the unit. If the unit is still jammed, the media may have to be removed manually. To release the jam, unbolt and remove the top cover to gain access to the ***STAGE 1*** Chamber. Remove the hard drive and/or remaining particles. Bolt the top cover back into place. Follow the startup procedures to restart the unit.

If ***STAGE 2*** experiences a jam, press the red ***EMERGENCY STOP*** pushbutton on the right side of the unit. Disconnect the power from the unit. Open the Collection Bin door and remove the Collection Bin. Unlock the latch to the right of the opening. Slide the Stage 2 Chamber out using the handle on the center of the Stage 2 Platform. Remove bolts on the hopper and lift it off of the Stage 2 Chamber. Remove any loose material from the Chamber. Utilizing the drive belt, manually rotate the rotor counter clockwise to clear the clogged material. Reassemble the equipment and insert the Collection Bin. Reset the unit by pressing the red ***RESET*** pushbutton. When the ***RESET*** pushbutton extinguishes, press the green ***START*** pushbutton to restart the unit.

See page 14 for diagrams.

Warning: Disintegrating of materials the unit is not intended for will likely result in jamming or damage. See page 13.

Shutdown Procedures:

5) After feeding the final drive, wait approximately 30 seconds before pressing the red ***STOP*** pushbutton. This will allow ***STAGE 1*** to clear before activating timed shutdown (approximately 90 seconds). The red ***STOP*** pushbutton will illuminate and the green ***START*** pushbutton will extinguish.

Important: If there is an emergency the red ***EMERGENCY STOP*** button on the right side of the unit can be pressed at any time to stop the unit.

Warning: Bypassing timed-shutdown can cause damage to or jamming of the ***STAGE 2*** Chamber.

Turn Key-Switch, located on the left side of the cabinet, to the ***OFF*** position.

Material Tested

THIS UNIT IS NOT INTENDED FOR ROTATIONAL MEDIA.

The Model 2 SSD-VK is capable of destroying the following products:

- 1" Solid-State Hard Drives
- CD/DVDs
- Thumb Drives
- PDAs and Cell Phones
- Tablets

All Capacitors, Batteries, and Liquid-Crystal Displays should be removed from Solid-State Drives and other Solid-State Media before running through the **Model 2 SSD-VK**. This will often involve opening the product before running it through the unit.
See Examples below:

EXAMPLE 1:

REMOVE

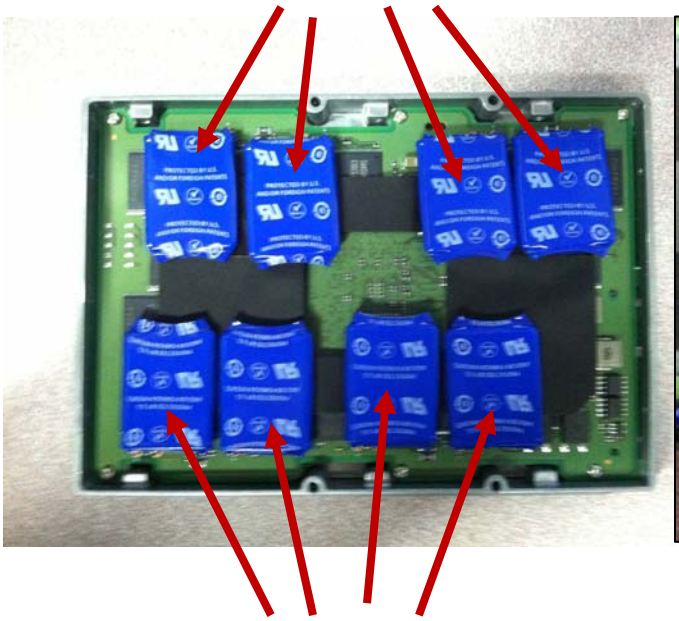

REMOVE

EXAMPLE 2:

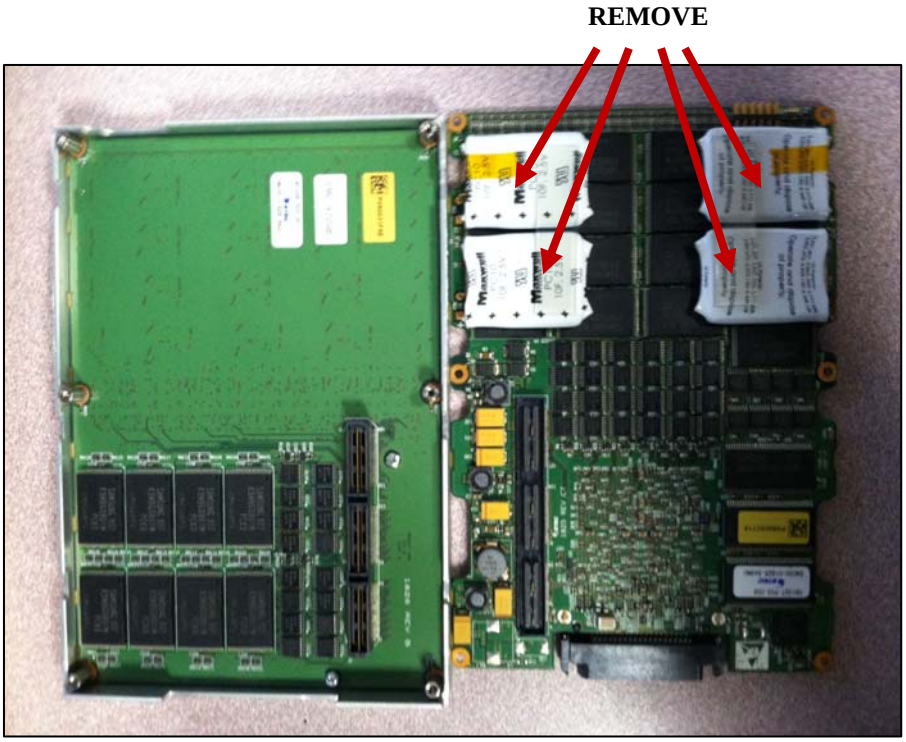

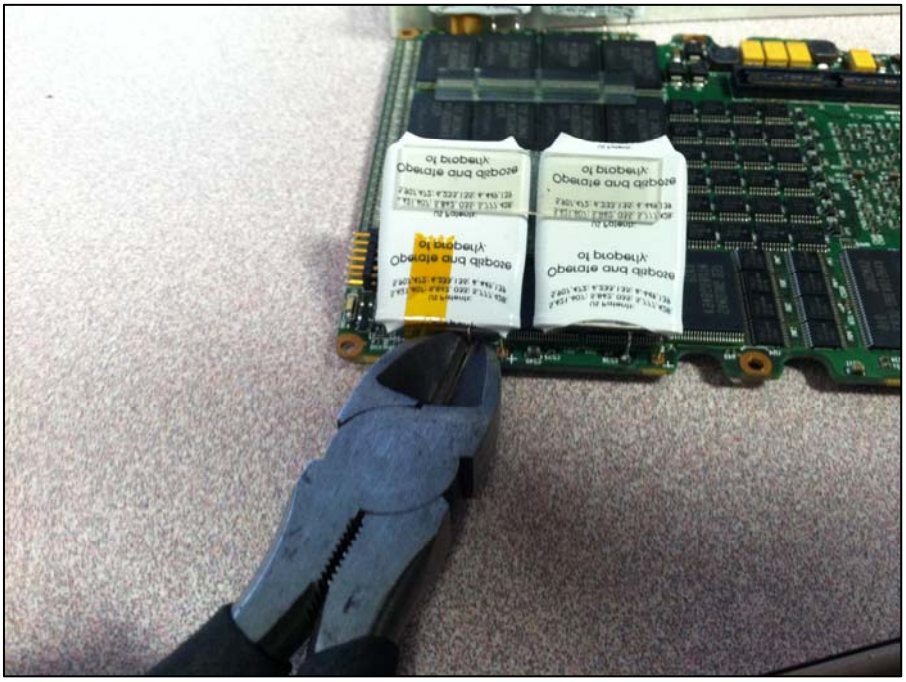

Maintenance

<u>Important / Caution:</u> Lock out Disconnect!

ALWAYS lock out the disconnect receptacle before cleaning, lubricating, maintaining, removal of any guards and after destruction operation is complete.

Warning: Shredded material can be sharp, SEM recommends wearing gloves.
Tools Needed: Gloves, Pliers and other hand tools

Access STAGE 2 Chamber:

1. Make sure all power to the unit is disconnected.
2. Open Collection Bin door.
3. Unlock latch to the right of the opening.
4. Slide Disintegrator out using the handle on the center of the STAGE 2 Chamber platform.
5. Remove bolts from the base of the Hopper, see page 16 for diagram.
6. Lift Hopper off of Cutting Chamber.

Remove Screen:

1. Access the Stage 2 Chamber (See above)
2. The Screen will be exposed under the platform. Remove six bolts from the Screen and lower it.
   <u>Caution</u>: Material resting on the screen may fall through upon removal.
   Eye Protection is recommended.

Cleaning:

Once per Day:

1. Disconnect all power from the unit.
2. Unbolt and remove the Top Cover to gain access to the STAGE 1 chamber.
3. Remove Debris and any magnets that may have built up on cutters and combers.
4. Visually inspect the cutters for damage.

Once Per Week:

1. Open Collection Bin door and remove Collection Bin.
2. Clean any excess debris from the Collection Bin area.

Lubrication:

For optimum performance, regular **Lubrication** is recommended.

When to Lubricate STAGE 1:
After approximately every 32 hours of operation:

- Apply light machine oil to cutters.

When to Lubricate STAGE 2:
Twice Yearly

- Grease fittings are accessible when the Collection Bin door is open and the Stage 2 platform has been pulled out.
- Grease with Gulflex "A", multi-purpose or equivalent, grease fittings are located on rotor bearings.

Belt Adjustment:

Remove the four bolts on the rear panel and remove the panel. The motor is mounted on a slotted frame. Loosen four (4) mounting bolts and use the two horizontal bolts on the frame to adjust the motor. Adjusting toward the rear of machine will tighten or adjusting forward will loosen or allow for belt removal. Proper belt tension is determined by extending thumb pressure on belt causing a slight bow on slack side. This should be no more than $^{1}/2$".

IMPORTANT: Belt should be checked and tightened if required after first two (2) days of operation, after that check monthly.

Knife Removal and Sharpening:

For full efficiency, knives should be sharpened regularly, depending on use. If for example, your knives require sharpening after three months of operation, your sharpening schedule should be every three months. It is highly recommended that a spare set of knives be available for your unit. Generally, knives require sharpening two to five times a year.

1) Access the Cutting Chamber (see Access Stage 2 Chamber above)
2) Prior to removing or replacing the rotor knives, back off bed knife adjusting screws. Cover the edge of each knife with a heavy gauze tape such as scotch filament or cloth tape. Remove all knives prior to replacing any of the knives.
3) To remove bed knives, first remove bolts, on the right, and on the left of each of the aluminum deflectors. Remove three bed knife bolts from each bed knife. Remove bed knife clamp plate and bed knife. Take spare bed knife and insert exactly the way the dull knife came out. Insert bed knife bolts and hand tighten. Finally replace the rotor knives. Remove the tape covering the edge of both rotor knives and adjust the distance between the rotor knife and bed knife by manually rotating rotor in reverse direction. Adjust to .005" clearance using a feeler gauge.
4) Knife Bolt Torques:

Rotor Knives:	50 FT lbs
Bed Knives:	45 FT lbs

Caution: Before tightening bed knife securely determine that the knives are set properly by manually rotating rotor in the operating direction to ensure that no rotor knife touches the bed knife.

Note: For sharpening specifications, see page 18.

Filter Change:

The HEPA and charcoal filter of this unit requires changing periodically, depending on use. The charcoal filter should be changed three times as often as the HEPA filter is changed. The charcoal filter is located behind the HEPA filter, and should be compressed for maximum efficiency.

Current Relay Adjustment:

This unit is designed to automatically reverse if it jams while shredding. The Electrical Current Relay controls this feature and is preset by the factory prior to shipping. However, power variations can cause the unit to jam and not reverse. To correct this problem the Current Relay may require a small adjustment.

Note: Press the STOP pushbutton before making any changes to the Current Relay. The power does not need to be off for this adjustment.

1. Remove cover on left side of machine to expose Current Relay
2. Turn the knob labeled "Threshold" clockwise to the next tick mark
3. Test by running drive thru

Important Note: If the unit does not automatically reverse after three adjustments, check the incoming power and voltage drop, this may require an electrician to verify.

Plastic Shield Adjustment

Located on either side of the Hopper are plastic shields that may require periodic adjustment. These can be moved by loosening the bolts fastening them to the hopper, and sliding them up until they fit properly. They should not be high enough to interfere with the sliding of the Stage 1 Platform, but they should be high enough to prevent debris from leaving the top of the hopper.

Maintenance Diagrams

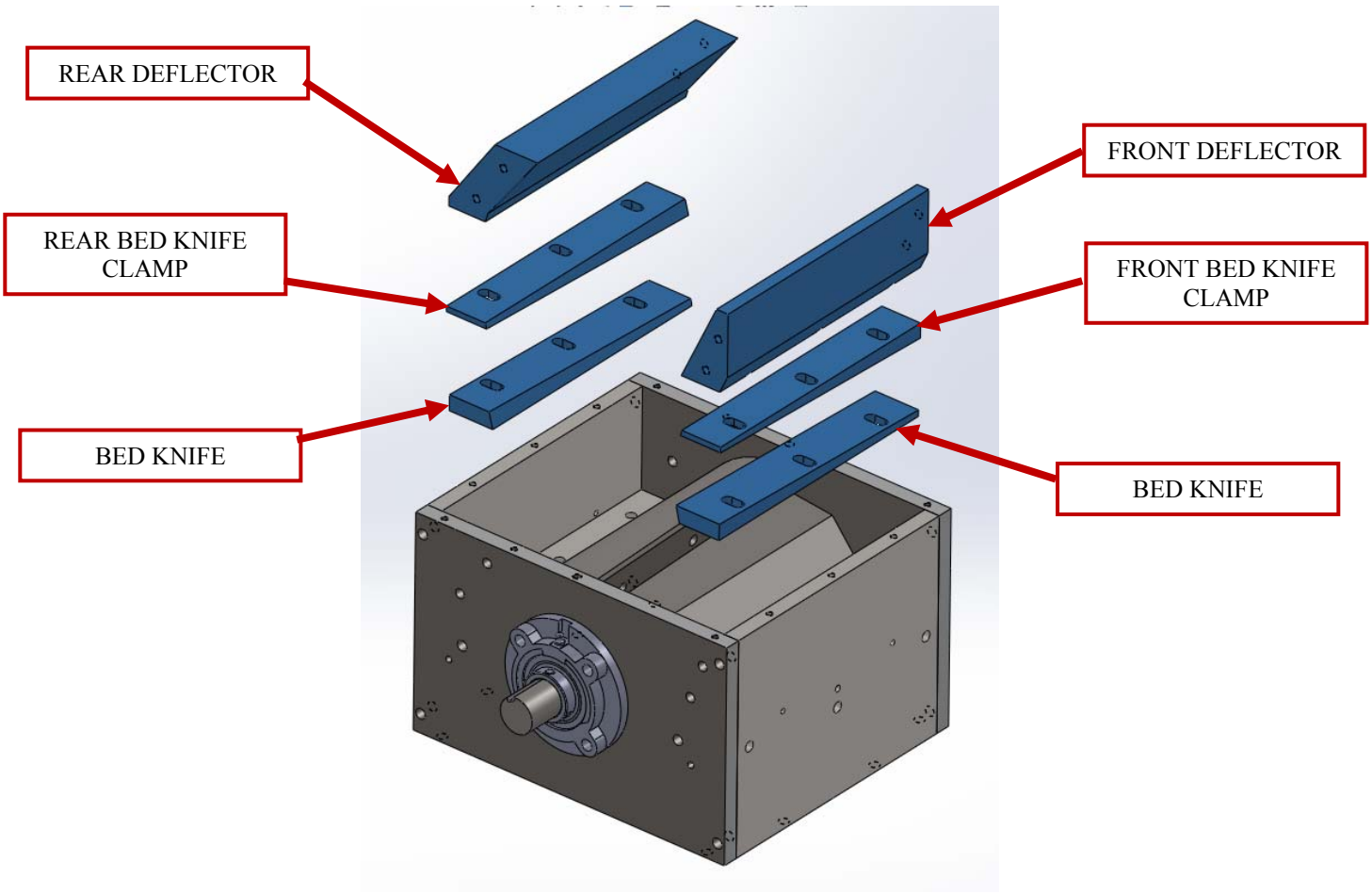

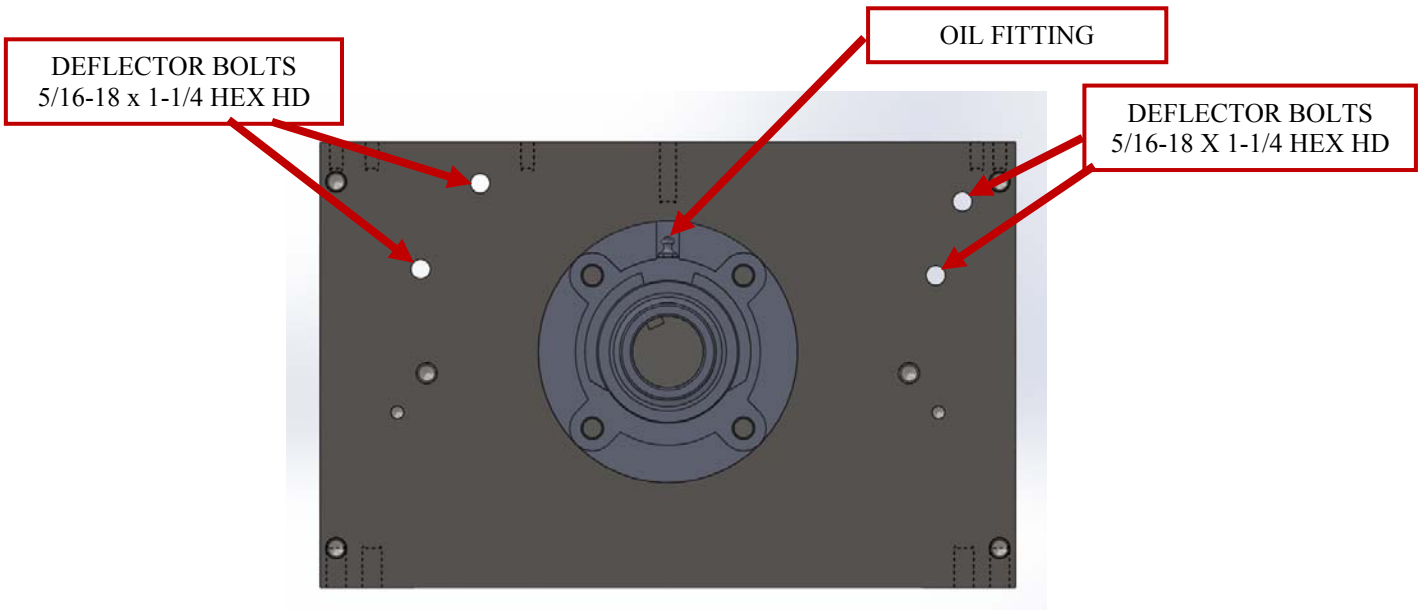

Maintenance Diagrams Continued

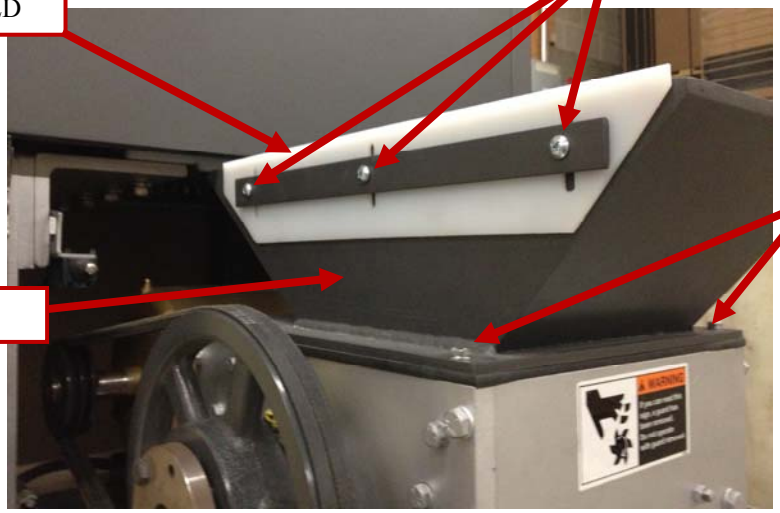

Maintenance Diagrams Continued

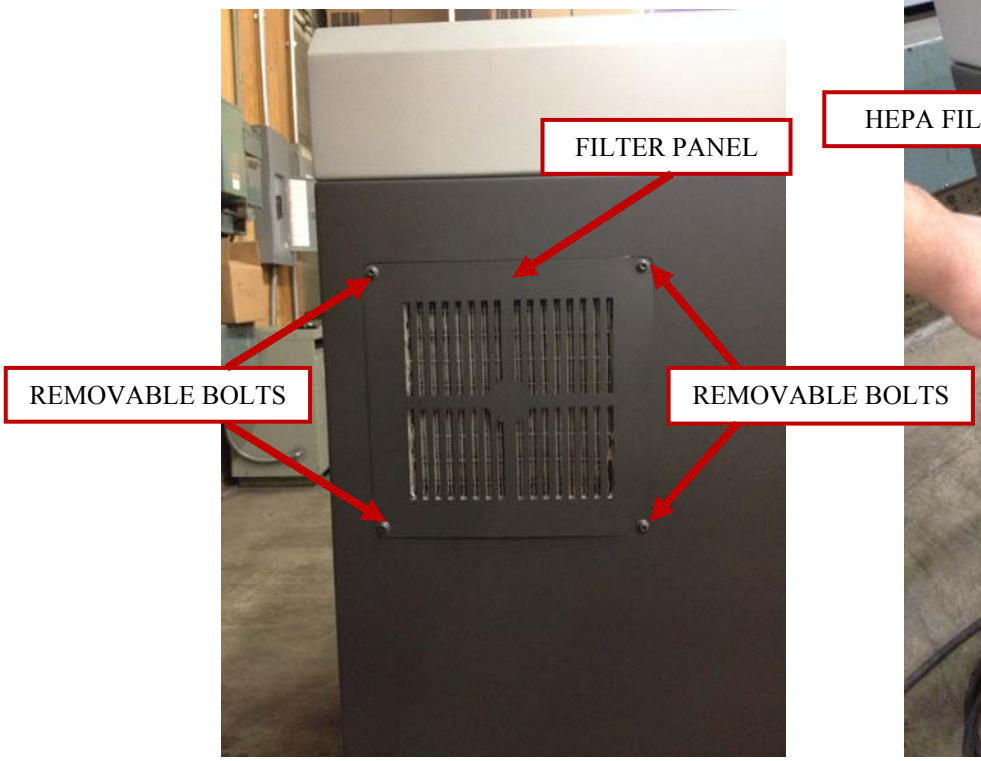

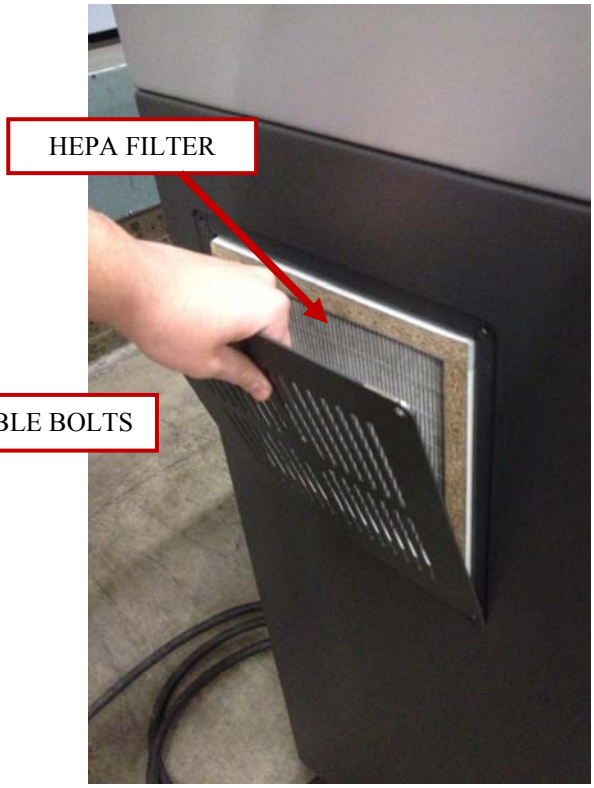

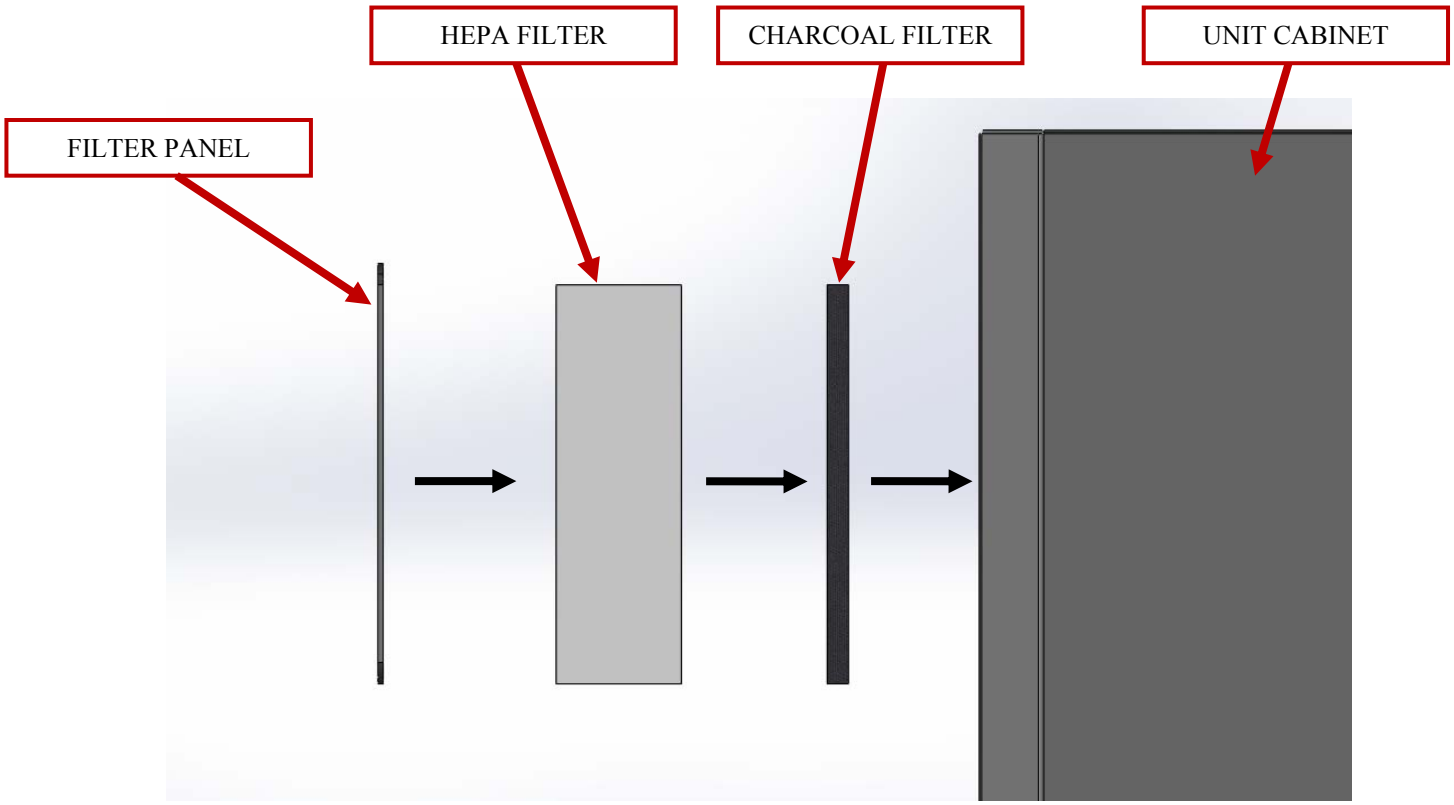

Recommended Rotor and Bed Knives Settings

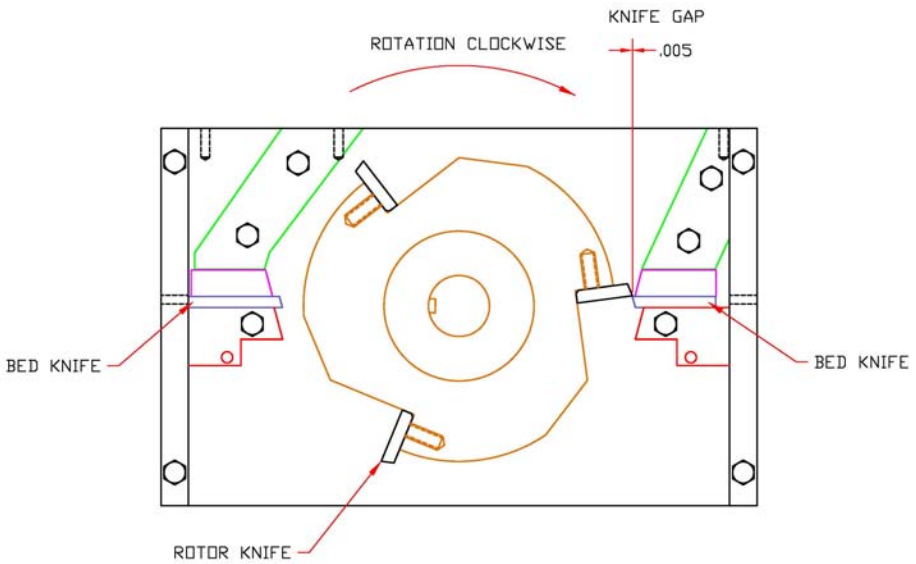

Knife Sharpening Settings

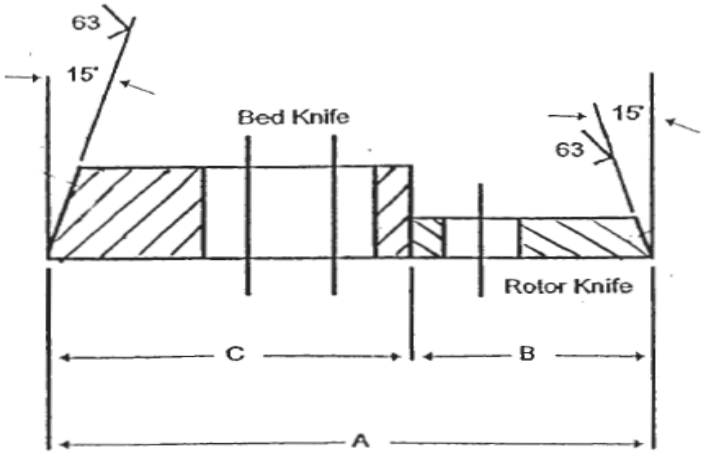

A= Minimum distance 2.625”

B= Bed knives must be held alike and parallel in sets within 0.010”

C= Rotor knives must be held alike and parallel in sets within 0.002”

NOTES ON KNIFE GRINDING:

1. After regrinding number of times, the knives must be checked to be sure that there will be adjustment left in the bed knives. The general rule is to place a rotor knife and bed knife back as shown above, and measure the total dimension "A" distance

   If dimension "A" is close to minimum, a new set of knives should be ordered from the S.E.M. Customer Service Department

Recommended Rotor and Bed Knife Resharpening

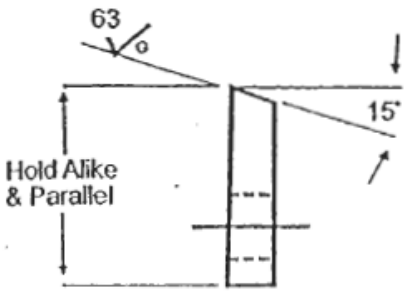

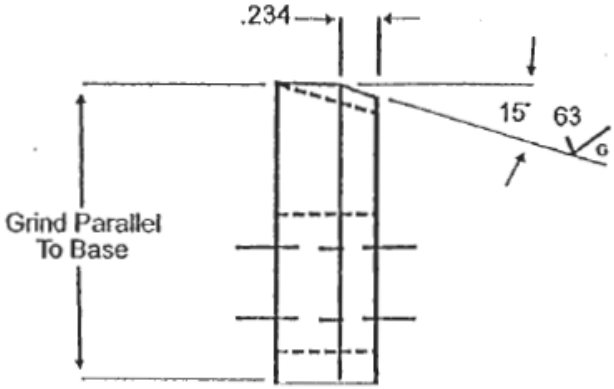

Stage 1 Chamber Assembly

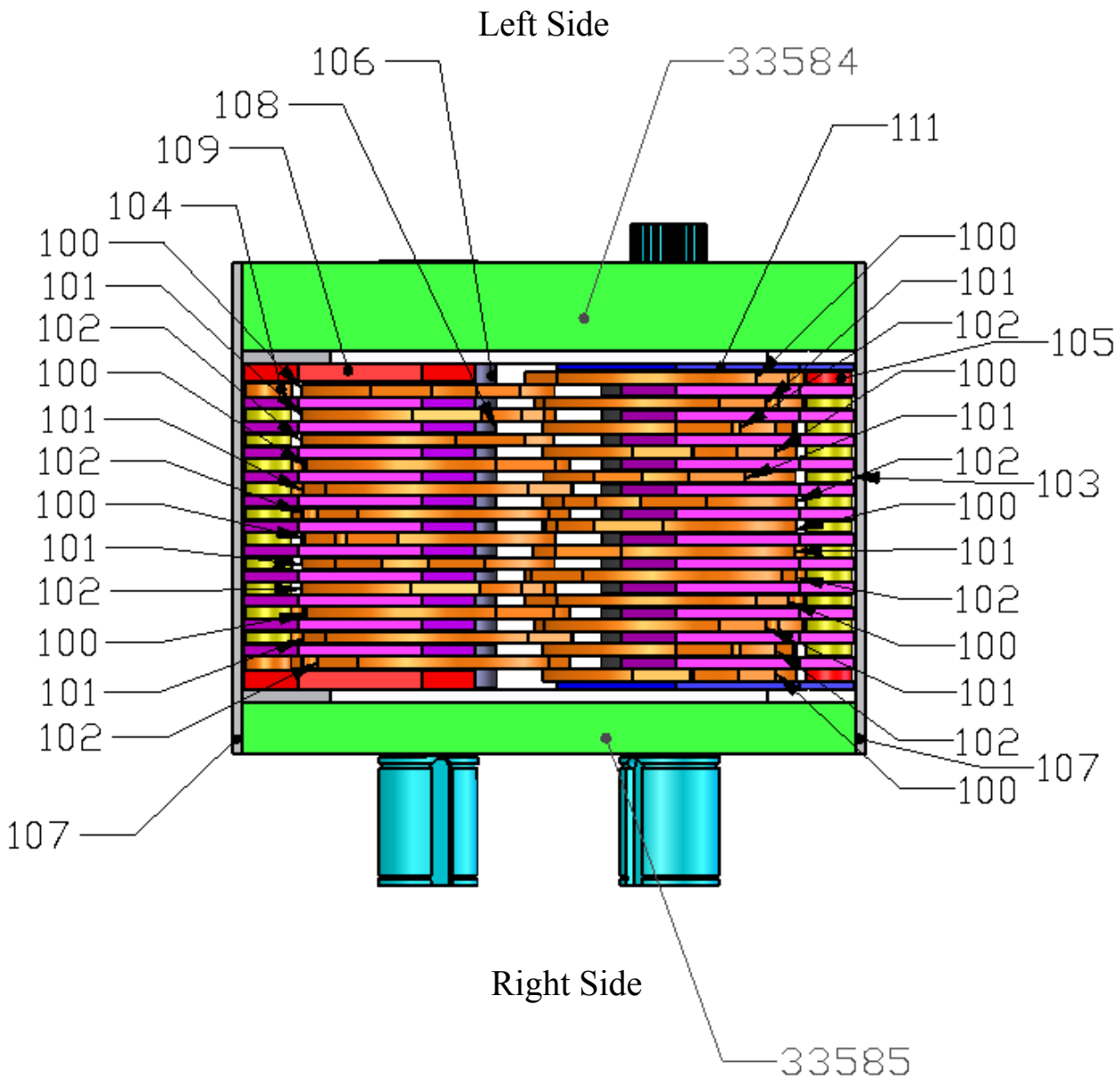

*All parts above denoted by a three-digit number have the part number 25381 followed by that number. For example: number XXX would be 25381-XXX.

Stage 2 Chamber Assembly

ABBREVIATED PARTS LIST/BOLT LOCATIONS			
ITEM	QTY	DESCRIPTION	PART/DWG#
1	1	Front Deflector	34146
2	1	Rear Deflector	34148
3	1	Bed Knife Clamp (Front)	34149
4	1	Bed Knife Clamp (Rear)	34150
5	2	Bed Knives	
6	3	Rotor Knives	
7	2	Bearing	
8	8	5/16-18x1-1/4 Hex Head	
9	8	5/16 Lock Washers	
10	6	3/8-16x1-1/4 Hex Head Grade 5	
11	6	3/8 Lock Washers	
12	6	1/4x1" Roll Pin	
13	8	3/8-16x1-1/2" Hex HD Cap Grade 5	
14	8	3/8 Flat Washers	

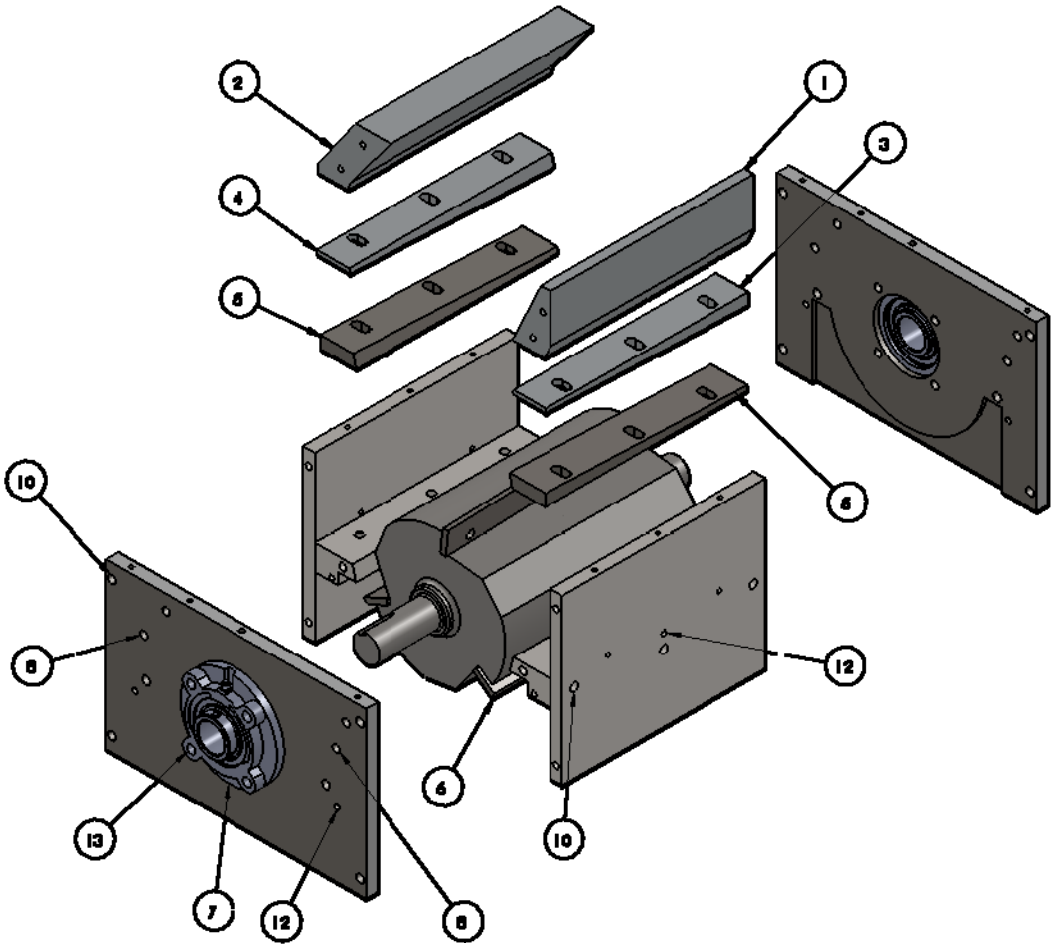

Electrical Diagram

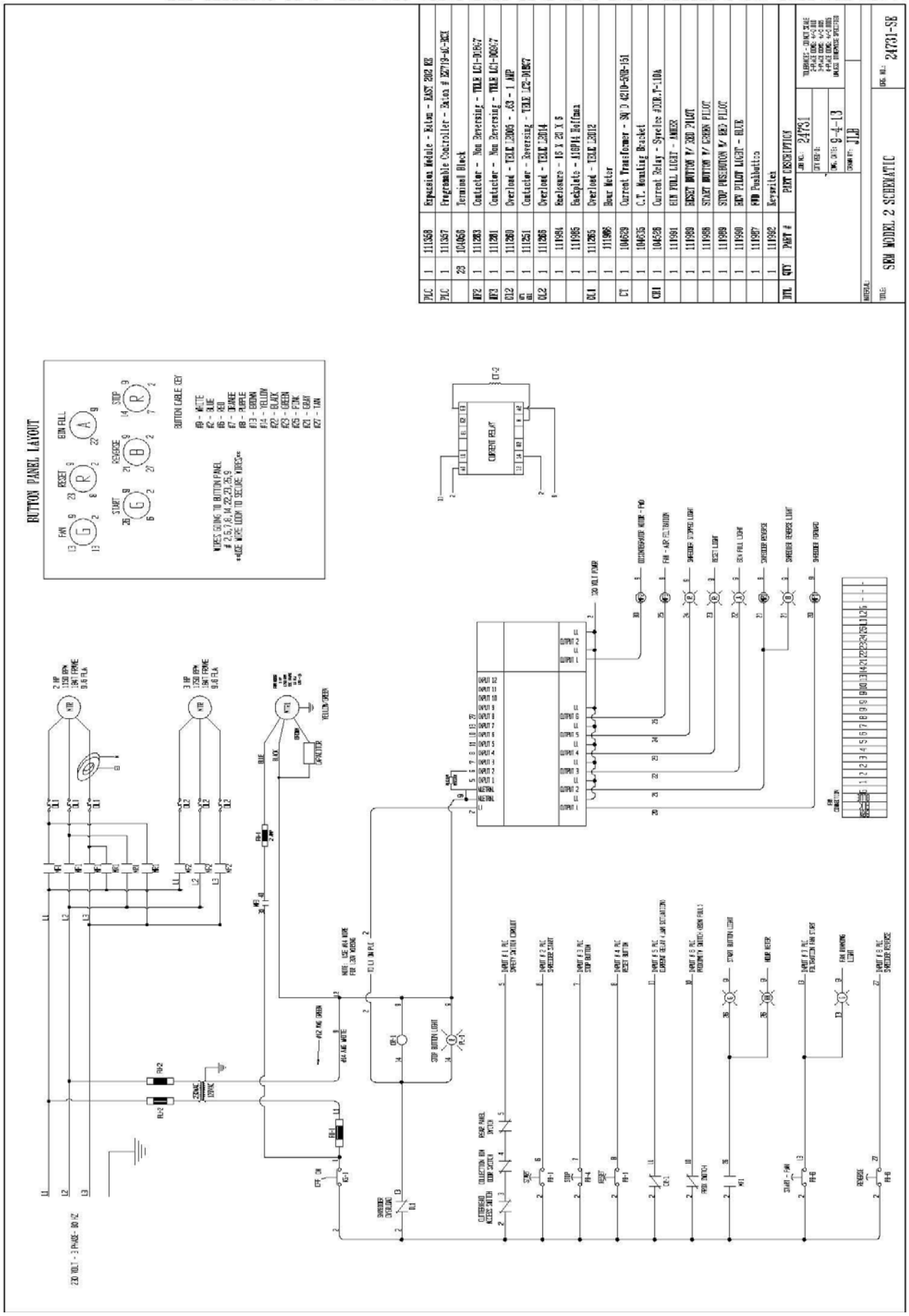

Recommended Spare Parts

ITEM	QTY	DESCRIPTION	PART/DWG#
1	1	Spare Set of Knives (3 Rotor / 2 Bed) designed for Model 2 SSD Disintegrator.	391200K/3
2	1	Spare Sizing Screen (2 mm) designed specifically for Model 2 SSD Disintegrator	3412SSDCR2
3	1	Spare Waste Collection Bin for Model 2 SSD-VK	WCB-2SSD
4	1	Carbon Pre-Filter for Model 2 SSD-VK (**3-PACK**)	CF-2SSD
5	2	Spare V-Belts for Model 2 SSD-VK (set of 2)	3VK500/2
6	3	Replacement HEPA Filter for Model 2 SSD-VK	HF-2SSD
7	2	Case of 50 Anti-Static Waste Collection BAGS	640ASB0202